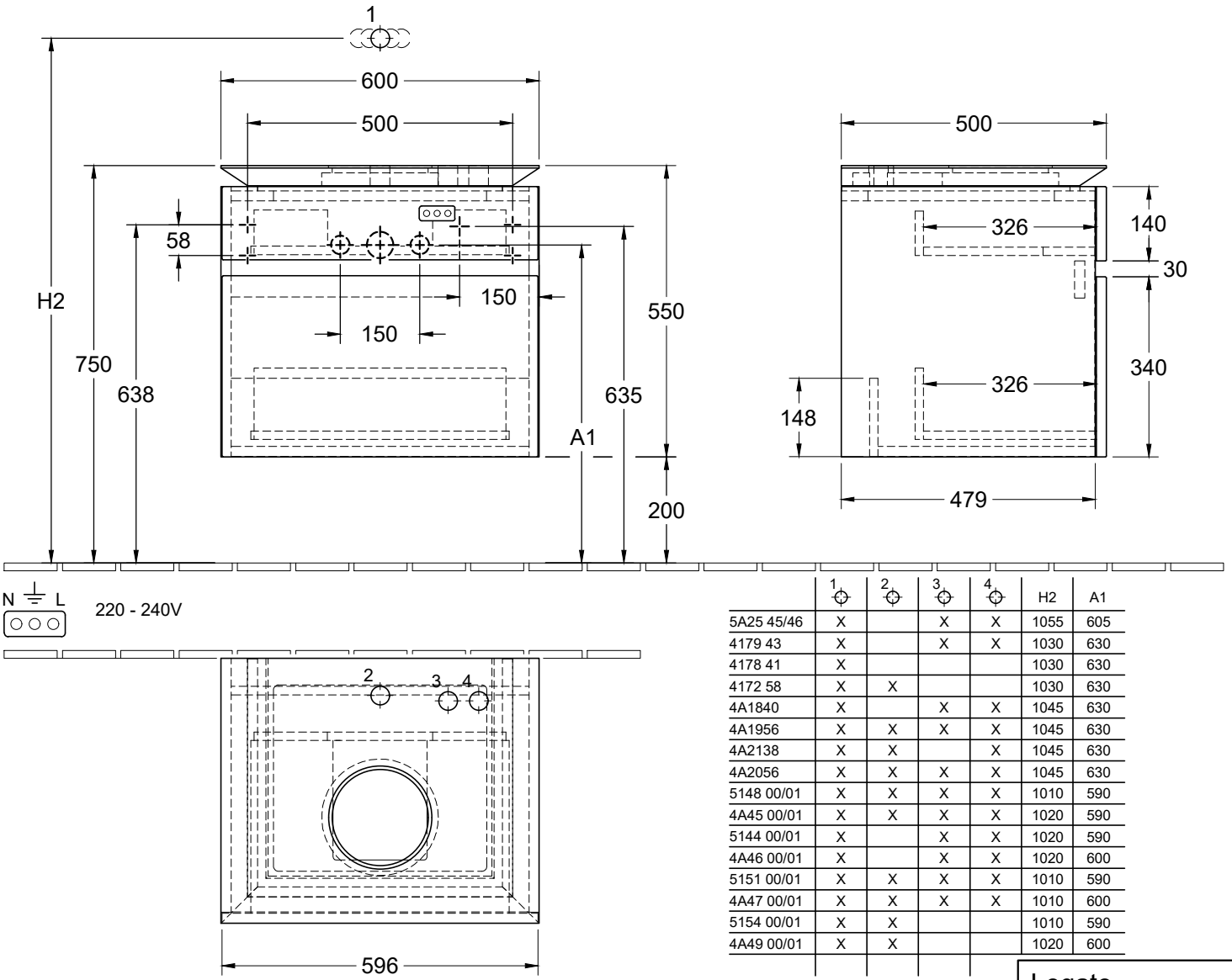

	1	2	3	4	H2	A1
5A25 45/46	X		X	X	1055	605
4179 43	X		X	X	1030	630
4178 41	X				1030	630
4172 58	X	X			1030	630
4A1840	X		X	X	1045	630
4A1956	X	X	X	X	1045	630
4A2138	X	X		X	1045	630
4A2056	X	X	X	X	1045	630
5148 00/01	X	X	X	X	1010	590
4A45 00/01	X	X	X	X	1020	590
5144 00/01	X		X	X	1020	590
4A46 00/01	X		X	X	1020	600
5151 00/01	X	X	X	X	1010	590
4A47 00/01	X	X	X	X	1010	600
5154 00/01	X	X			1010	590
4A49 00/01	X	X			1020	600

Legato
B56800XX / B568L0XX

V01 / 25.01.2022 | 1:12

Villeroy & Boch
1748