Produced from: Feb.2024

GUSTO

Ideal Standard

BD414XX

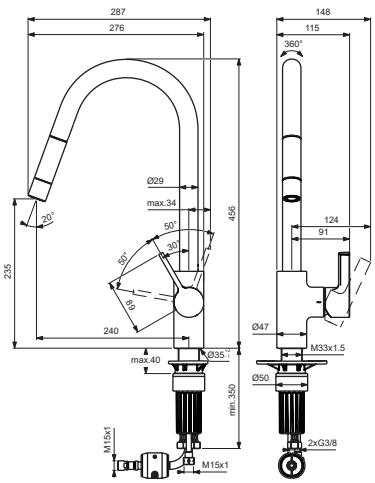

BD416XX
BD471XX

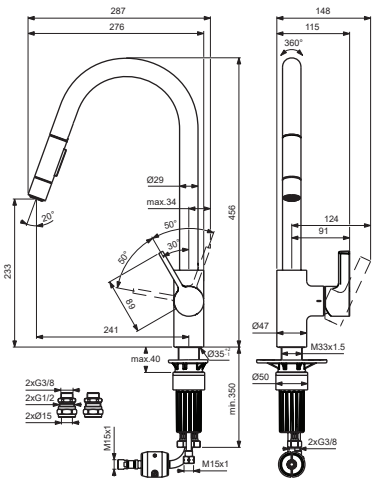

without connector:
BD416XX
with connector:
BD471XX

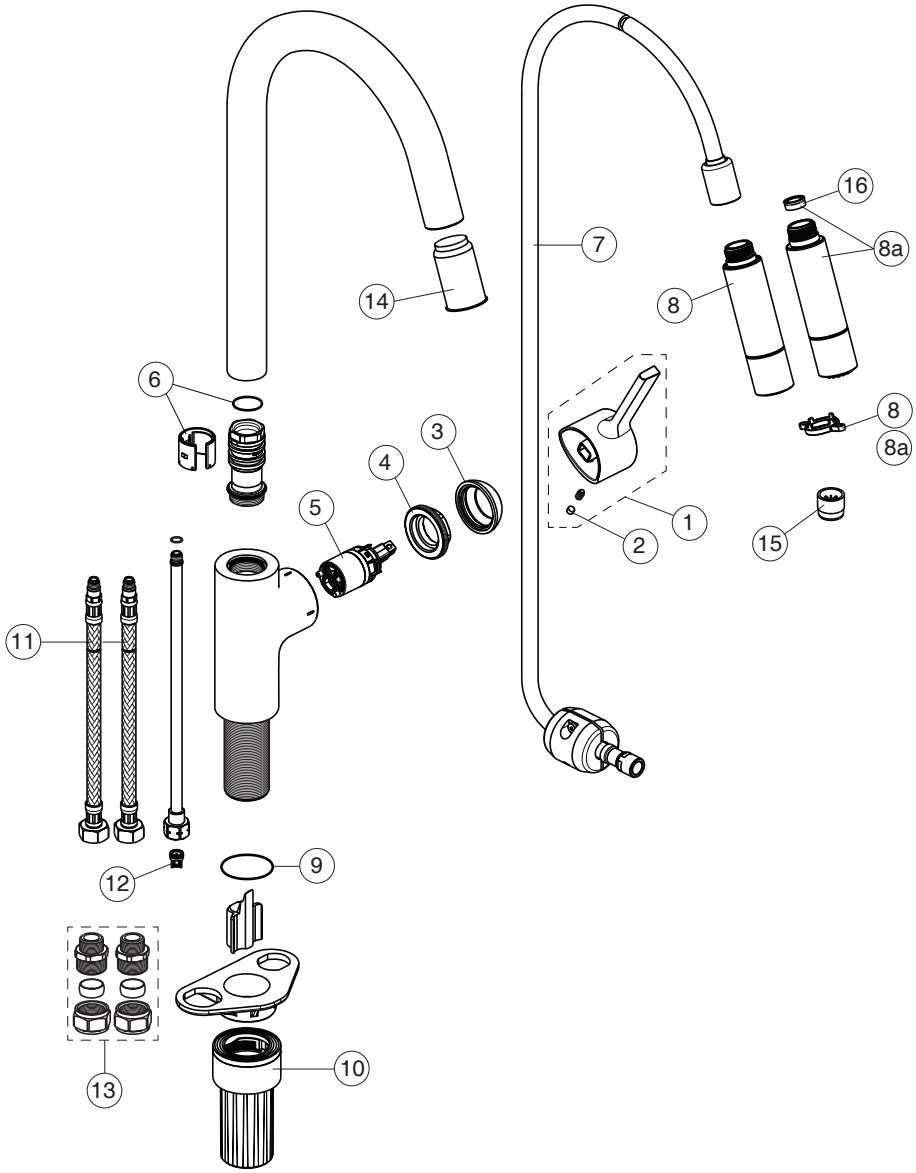

For XX=Coverage-Designate:
AA=chrome,**GN**=silver storm
A2=brushed gold,**J4**=sunset rose
A5=magnetic grey

For Instance:
B961813AA for chrome

Pos.	Signify	Spare parts-Nr.	Quantity	Pos.	Signify	Spare parts-Nr.	Quantity
1	Lever	B961813XX	1 Set	14	Plastic insert	A960911NU	1 Pcs.
2	Rubber button	A963751NU	1 Pcs.	15	Flow straightner	B960510NU***	1 Set
3	Cover cap	B961815XX	1 Pcs.	16	Flow regulator 8 l/min	B961941NU	1 Pcs.
4	Screw M41x1.5/M33x1.5	B961814NU	1 Pcs.				
5	Cartridge Ø28mm	A861397NU	1 Set				
6	Sealing set for tub.spout	B961582NU	1 Set				
7	Plastic hose L1500	B961816AA	1 Pcs.				
8	Pull-down spray 1F	B961817XX*	1 Pcs.				
8a	Pull-down spray 2F	B961818XX**	1 Pcs.				
9	O-Ring Ø36.2x2.62	A962575NU	1 Pcs.				
10	Fixation set	B961807NU	1 Set				
11	Fl.hose G3/8/M8x1 /L500	A962005NU	1 Pcs.				
12	Rv-patrone	A960944NU	1 Pcs.				
13	Connector G3/8,Ø15-set	B960845NU	1 Set				

**for BD414XX **for BD416XX ; BD471XX ***for BD471XX*

Produced from: March 2023

GUSTO

Ideal Standard

BD414XX

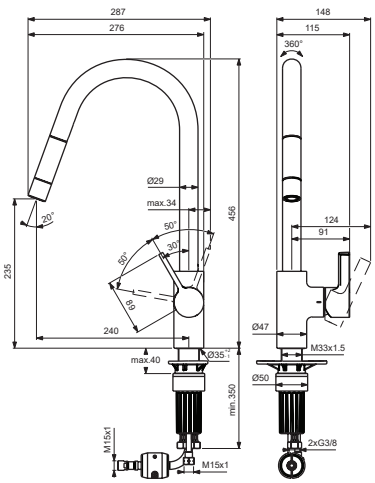

BD416XX
BD471XX

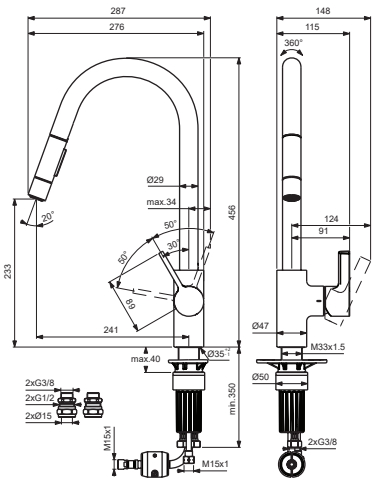

without connector:
BD416XX
with connector:
BD471XX

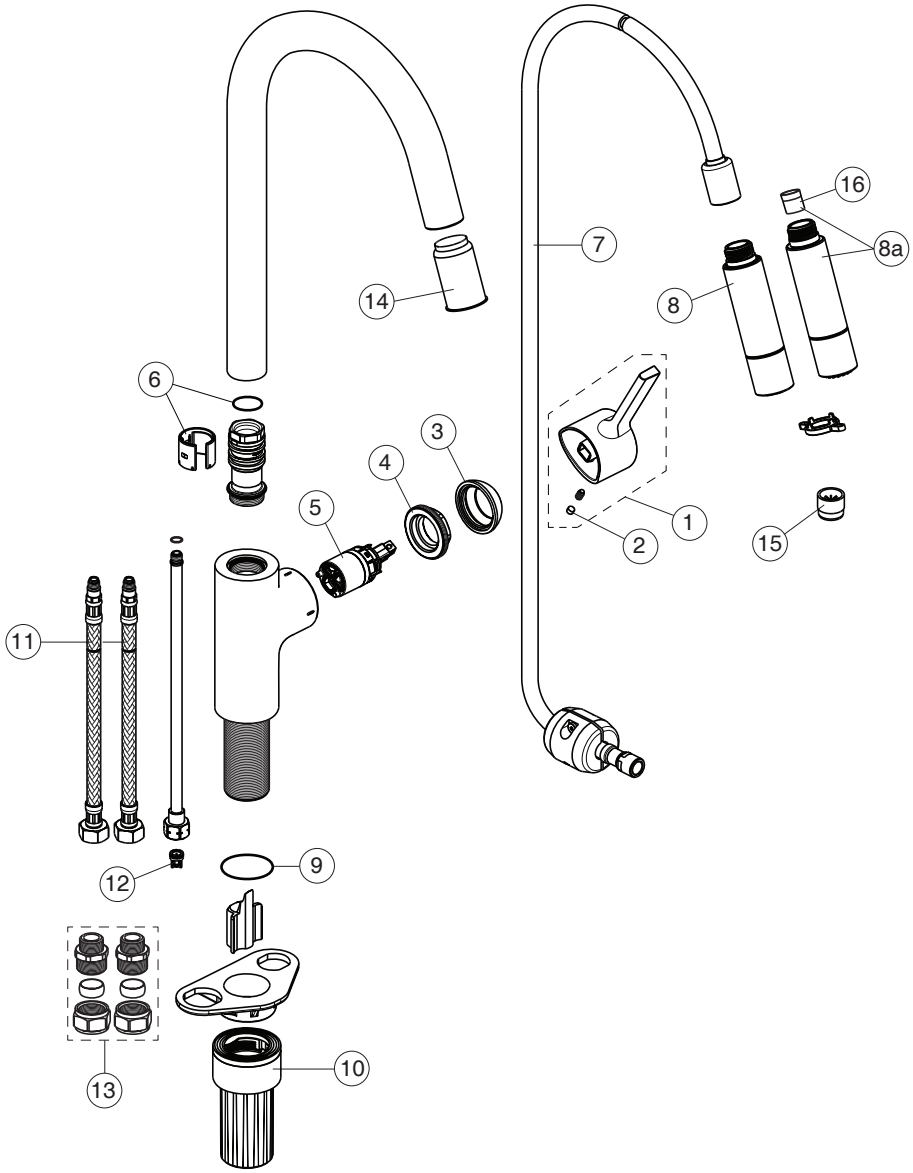

For XX=Coverage-Designate:
AA=chrome,**GN**=silver storm
A2=brushed gold,**J4**=sunset rose
A5=magnetic grey

For Instance:
B961813AA for chrome

Pos.	Signify	Spare parts-Nr.	Quantity	Pos.	Signify	Spare parts-Nr.	Quantity
1	Lever	B961813XX	1 Set	14	Plastic insert	A960911NU	1 Pcs.
2	Rubber button	A963751NU	1 Pcs.	15	Flow straightner	B960510NU***	1 Set
3	Cover cap	B961815XX	1 Pcs.	16	Flow regulator 8 l/min	B961093NU	1 Pcs.
4	Screw M41x1.5/M33x1.5	B961814NU	1 Pcs.				
5	Cartridge Ø28mm	A861397NU	1 Set				
6	Sealing set for tub.spout	B961582NU	1 Set				
7	Plastic hose L1500	B961816AA	1 Pcs.				
8	Pull-down spray 1F	B961817XX*	1 Pcs.				
8a	Pull-down spray 2F	B961818XX**	1 Pcs.				
9	O-Ring Ø36.2x2.62	A962575NU	1 Pcs.				
10	Fixation set	B961807NU	1 Set				
11	Fl.hose G3/8/M8x1 /L500	A962005NU	1 Pcs.				
12	Rv-patrone	A960944NU	1 Pcs.				
13	Connector G3/8,Ø15-set	B960845NU	1 Set				

**for BD414XX **for BD416XX ; BD471XX ***for BD471XX*