FRAME 25 MIRROR CABINET

Mirror cabinet with LED light

40880.4
40881.4
40882.4
40885.4
40886.4
40887.4

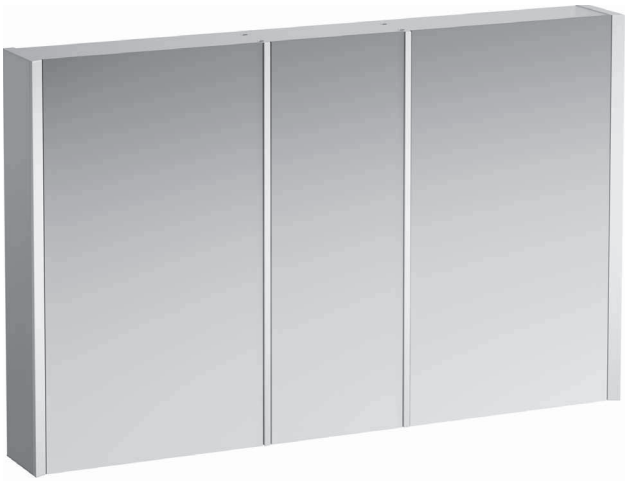

TECHNICAL DATA

Order no.	40880.4 / with sensor switch, 2 sockets (EU) 40881.4 / hardwired for room switch, 2 sockets (CH) 40882.4 / hardwired for room switch, without sockets 40885.4 / bottom ambient light, with sensor switch, 2 sockets (EU) 40886.4 / hardwired for room switch, bottom ambient light with sensor switch, 2 sockets (CH) 40887.4 / hardwired for room switch, bottom ambient light with sensor switch, without sockets
Certified to	IP44
Dimensions (WxHxD)	1200 x 750 x 150 mm
Specification	Body – Inner part anodized aluminum (sidewall top, bottom), back wall grey melamine coated MDF Doors – Glass 3+3 mm 3 doors with inside and outside mirrors, including handles (optional usable) With vertical LED light 4x 14W/m, 4000 Kelvin (daylight), IP44, 230V 8 glass shelves (adjustable) 3/2/3

Weight	33,0 kg
Accessories excl.	Accessories set consisting of 1 organizer, cosmetic mirror and magnetic bar self adhesive, order no. 49060.0
Mounting acc. incl.	Installation set, order no. 49063.2
Mounting acc. excl.	Installation frame set for mirror cabinet 1200 mm, aluminium, dimensions 1230 x 780 x 30 mm, order no. 40888.0 (only 40880.4, 40881.4, 40882.4 in connection with colour option 144)
Mounting information	The fortification walls must meet the requirements of the furniture in terms of weight and the supplied fasteners. This can not be guaranteed, another method of attachment is chosen. 230V power supply required. **Attention: Clearance for sensor switch min. 15 cm below mirror cabinet!**
Colours side wall (cover)	144 – Mirror, 145 – Glass with white backing

TECHNICAL DRAWINGS / S 1 : 20

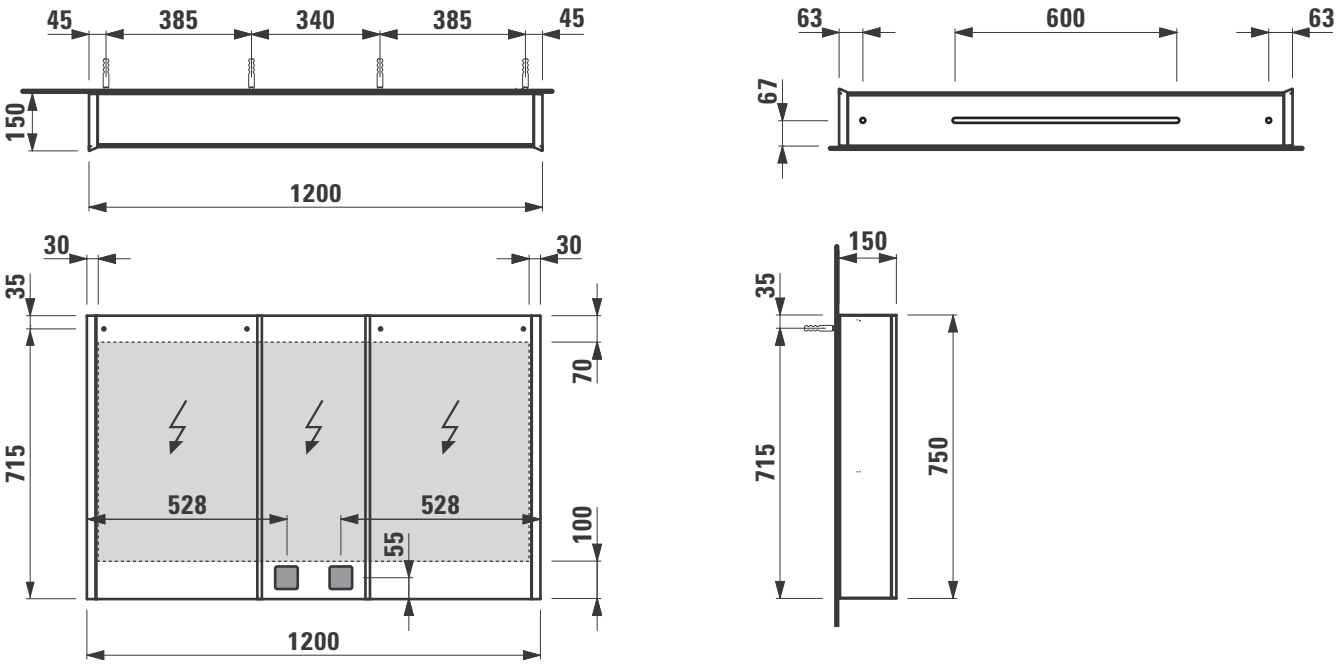

LAUFEN

Z 180906